CONTROL / SIREN SYSTEMS

Euro 1

Be Heard, Be Seen, Be Woodway

Ultra compact remote mounted amplifier with 16 warning tones, Hands Free, and horn ring override capability.
Scan-Lock™ tone selection and 4 modes of operation. One of the most advanced remote mounted Whelen® amplifiers to date.

2 Year Warranty | 12 VOLT + - | 200 WATTS | Hands Free | Yelp | Wail | Piercer | 2 Tone | Air Horn | Scan Lock | R10 | AES Spec 5 Approved

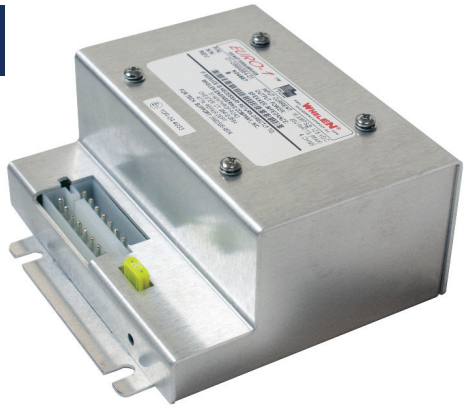

KEY FEATURES:

- Ultra compact design makes the Euro-UK ideal for both overt and covert applications.
- Power to drive up to two x 100 Watt, 11Ω speakers.
- 16 primary siren tones available WAIL, YELP, HI/LO, PIERCER, MECHANICAL, TRI-TONE, AIR HORN-HI/LO, ALT. WAIL, ALT. YELP, H-WAIL, WAIL-378, YELP-225, MARTIN TONE, H-HI/LO, COMPOSITE TRI-TONE, PULSE YELP/AIR HORN.
- Hands Free operation allows the driver to turn the siren ON, activate the YELP, WAIL or TWO TONE/PIERCER tones and turn the siren OFF from the vehicle's road horn button. Hands Free control allows the driver to control the siren system without taking their eyes off the road and hands off the steering wheel.
- Conveniently accessible Scan-Lock™ button allows customer tone programming.
- 5 modes of operation. LED lights indicate the mode of operation that the siren has been set to.
- Output open/short circuit protection.
- Harmonically rich composite AIR HORN tones.

DIMENSIONS:

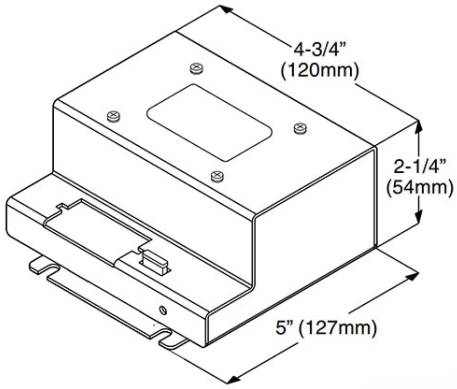

TECHNICAL SPECIFiCATIONS:

- **Input Voltage:** 12V
- **Polarity:** Negative ground
- **Polarity Protection:** Diode/Fuse
- **Output Load:** Two 11Ω speakers
- **Input Current (off):** 0 mA
- **Input Current (siren on):** 15 Amps (max)
- **Standby Current:** 10 mA (max)
- **Fuse:** 20 Amp
- **Fuse Mounting:** Spade type, PC board
- **Output Short Protection:** Fuse
- **Horn/Ring Control:** +12V or ground
- **Weight:** 2.4 lbs / 1.2 kg
- **Operating Temperature:** -30° C to +60° C
- **Operating Humidity:** 0-99% Non-condensing
- **Connector:** One 16 position input connect

MODEL NUMBER:

EURO-UK: 12V Remote Siren Amplifier

Beta™

Remote mounted amplifier with Public Address and Hands Free operation, multiple warning tones and horn ring override capability.
BETA Sirens allow easy set-up and configuration to meet local requirement.

2 Year Warranty | 12 VOLT + - | 24 VOLT + - | 200 WATTS | Yelp | Wail | Piercer | 2 Tone | Air Horn | Customer Program | Scan Lock | R10

KEY FEATURES:

- Lower profile design which exhibits a smaller footprint in comparison to 2013 model
- 200W (2 x 100W) speaker compatibility.
- Multiple tone selection via Scan-Lock™.
- Siren in use feature.
- Backwards compatibility with old BETA as comes with an interconnecting cable
- Public Address and five siren tones available. Use up to four tones: WAIL, YELP, PIERCER or HI/LO and AIR HORN.
- Hands Free operation allows the driver to turn the siren ON, activate the YELP, WAIL or TWO TONE/PIERCER tones and turn the siren OFF from the vehicle's road horn button. Hands Free control allows the driver to control the siren system without taking his eyes off the road and hands off the steering wheel.
- Conveniently accessible dip switches on remote amplifier allows instant configuration of popular operating features.

DIMENSIONS:

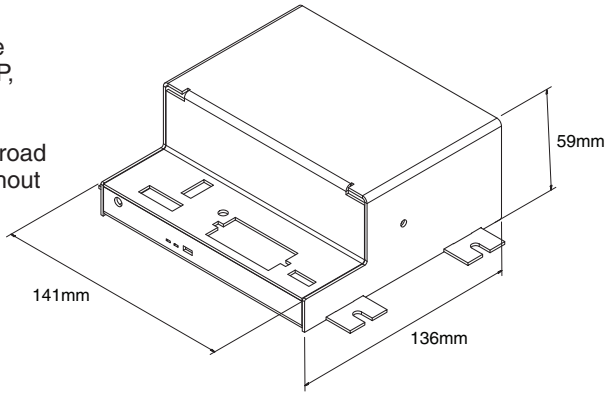

MODEL NUMBER:

BETA112E: 200W European Model Update 2014 - 12V
BETA112R: 200W Standard Model Update 2014 - 12V
BETA1124R: 200W Standard Model Update 2014 - 24V

© Copyright 2014 - Woodway Engineering Ltd - All Rights Reserved